AX3 LightDrop

Optical

Colours
RGBW
Total LED power
15W
Luminous Flux
390Lm
Emittance (@2m)
1300Lx
Strobe
0-25Hz
Beam Angle
13 °
Pixels
1

Electrical

Battery
LG Chem Lithium-ion
Battery Lifetime
70% after 300 cycles
Battery Runtime
Up to 20 hours
LED Lifetime
50.000 Hours
Charging time (nominal)
7 Hours
Input Voltage (charger)
90-264V 47-63Hz
Input voltage (light)
5V 2.5A

Control

Wireless Modules
865-870MHz
902-928MHz
2.4GHz
Range
300m | 330 Yards
Wireless DMX
CRMX & others, excluding W-DMX G5, City Theatrical

Construction

Housing
ABS
IP Rating
IP65
Relative humidity
0-100%
Operating Temperature
0-40 °C
32-104 °F
Weight
0.679kg
1.4Lbs
Dimensions (with bracket)
120 x 59 x 114 (mm)
7.4 x 2.3 x 4.4 (inches)

Accessories

Charger
AX3-CHR (Included)

Hooks (3)
AX3-EBLT (Included)

Rubber Feet (4)
AX3-FEET (Included)

Bracket
AX3-STA (Included)

30° diffuser
AX3-DDSK30 (Included)

120°diffuser
AX3-DDSK-120(Included)

Wallwash diffuser
AX3-WWDSK

Diffuser dome
AX3-DDM

Charging case
AX3-CHRCSE
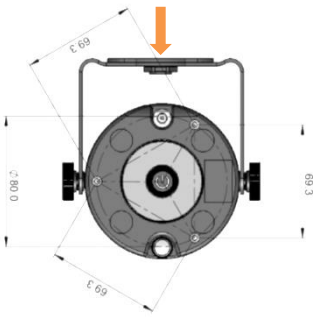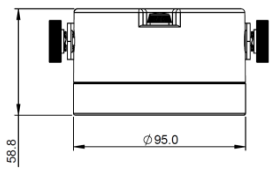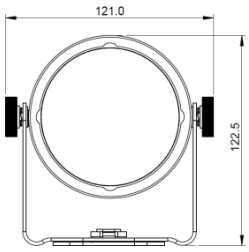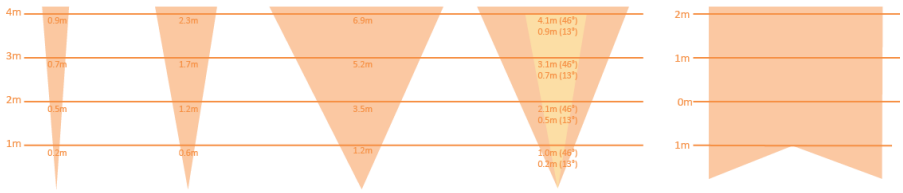
3.8" screw thread
Compatible with Manfrotto
Bolt type 013